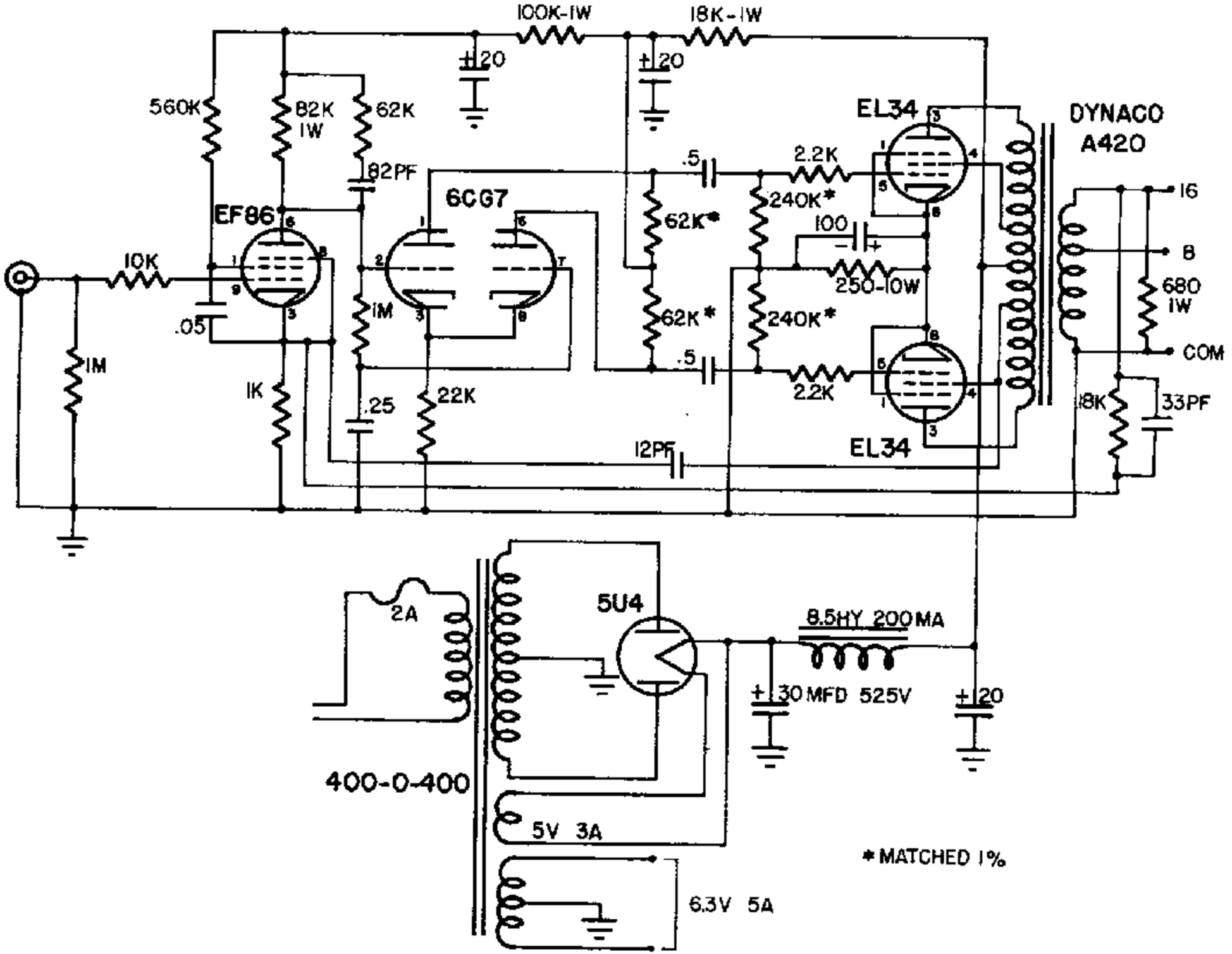

IMPROVED MULLARD 30 WATT AMPLIFIER USING DYNACO A-420 TRANSFORMER

Dynaco Modified Mullard Circuit